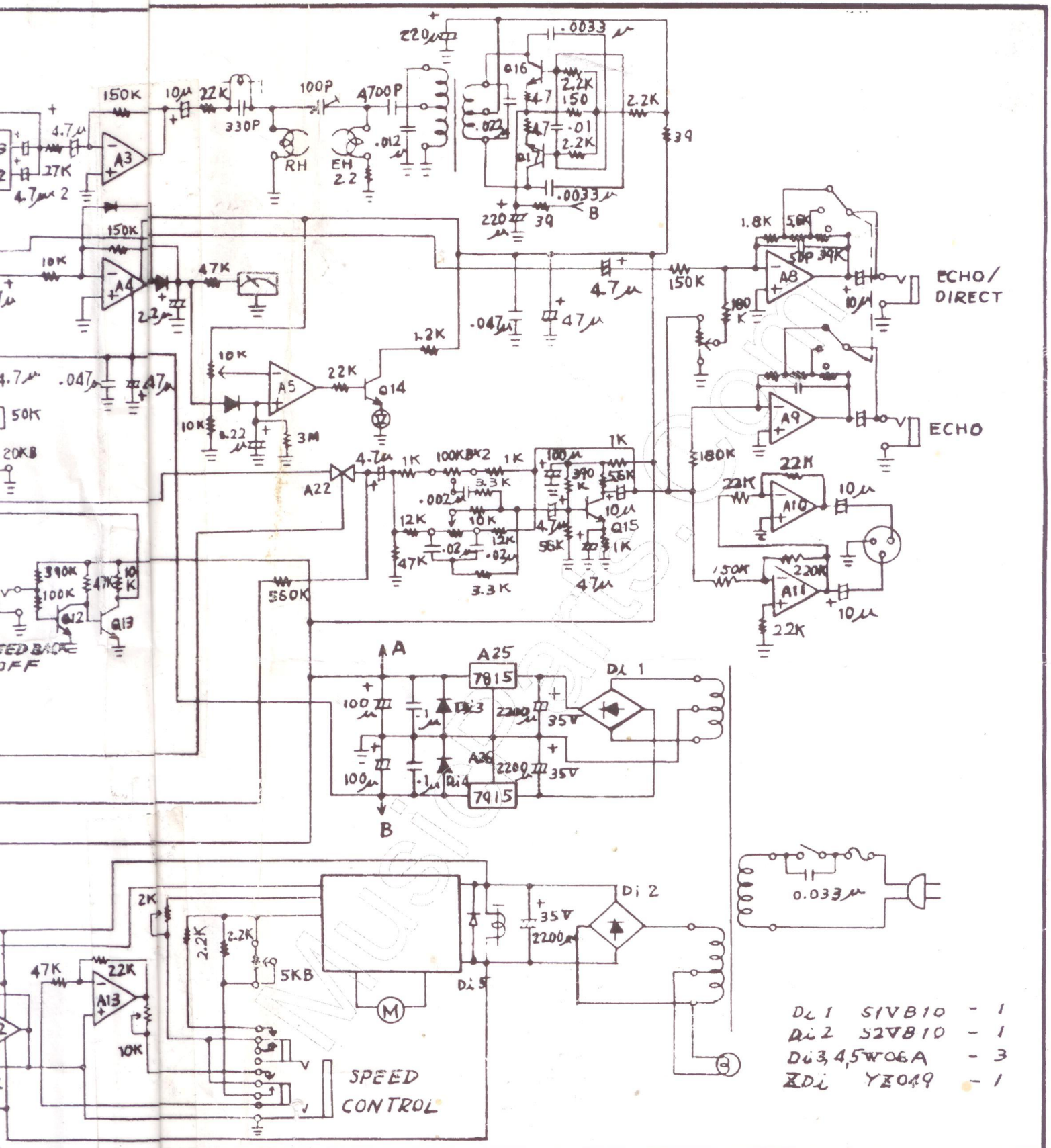

REVISIONS	SCHEMATIC	MODEL No. SE - 500
	CHECK / DESIGN: R S / DRAWN / DATE: 7-25	No.

Unicord Westbury, N.Y. 11590
a Division of Gulf + Western Manufacturing Company

Printed in U.S.A. FE 5c1178